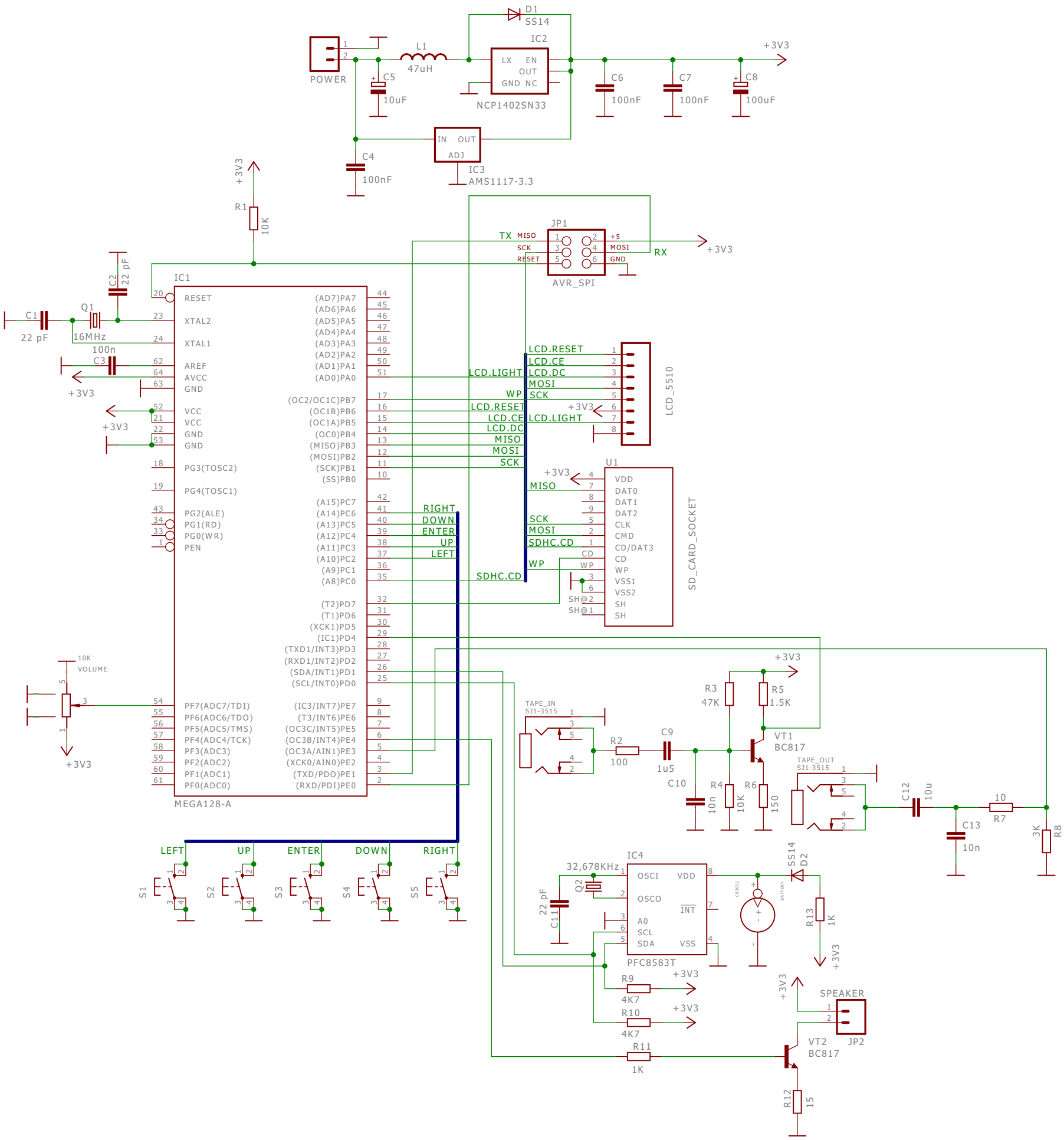
POWER
L1
47uH
D1
SS14
IC2
NCP1402SN33
C5
10uF
C6
100nF
C7
100nF
C8
100uF
+3V3
IC3
AMS1117-3.3
C4
100nF
R1
10K
JP1
AVR_SPI
TX
RX
MISO
SCK
RESET
MOSI
GND
IC1
MEGA128-A
C1
22 pF
C2
22 pF
Q1
16MHz
C3
100n
LCD_5510
LCD.RESET
LCD.CE
LCD.DC
LCD.LIGHT
SD_CARD_SOCKET
U1
SDHC.CD
RIGHT
DOWN
ENTER
UP
LEFT
10K
VOLUME
TAPE_IN
SJ1-3515
TAPE_OUT
SJ1-3515
R2
100
C9
1u5
C10
10n
R3
47K
R4
10K
R5
1.5K
R6
150
VT1
BC817
C12
10u
C13
10n
R7
10
R8
3K
S1
S2
S3
S4
S5
32,678KHz
Q2
C11
22 pF
IC4
PFC8583T
OSCI
OSCO
A0
SCL
SDA
VDD
INT
VSS
D2
SS14
R13
1K
R9
4K7
R10
4K7
R11
1K
SPEAKER
JP2
VT2
BC817
R12
15