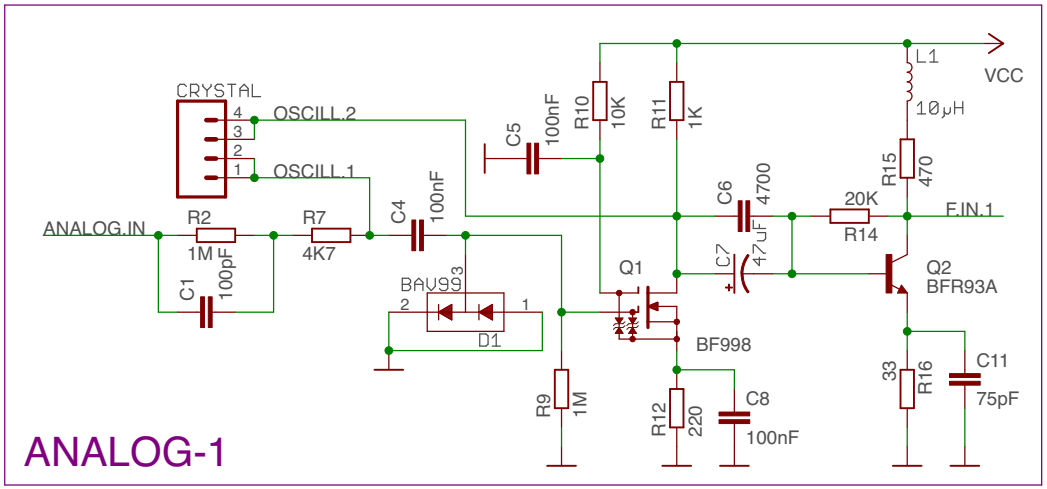
ANALOG-1
CRYSTAL
OSCILL.2
OSCILL.1
ANALOG.IN
R2
1M
R7
4K7
C1
100pF
C4
100nF
BAV99
D1
C5
100nF
R10
10K
R11
1K
L1
10µH
VCC
C6
4700
C7
47uF
20K
R14
R15
470
F.IN.1
Q1
BF998
Q2
BFR93A
R9
1M
R12
220
C8
100nF
33
R16
C11
75pF

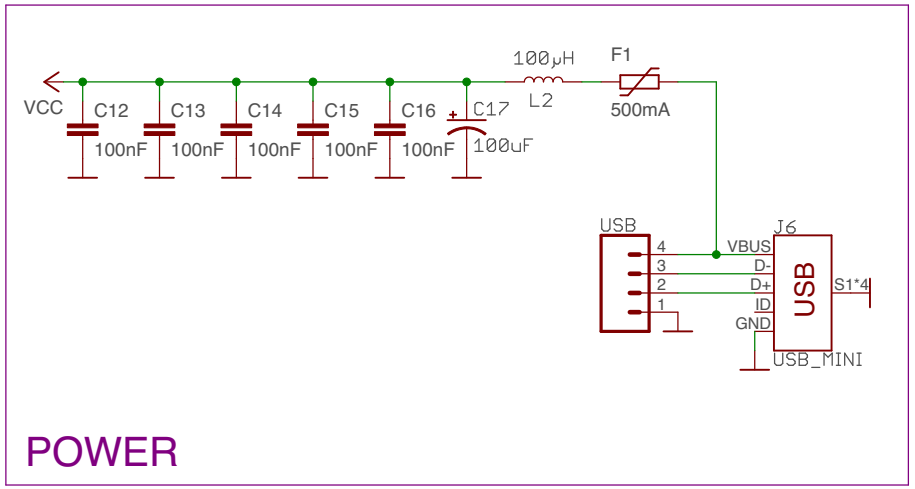
POWER
VCC
C12
100nF
C13
100nF
C14
100nF
C15
100nF
C16
100nF
C17
100uF
L2
100µH
F1
500mA
USB
J6
VBUS
D-
D+
ID
GND
USB
S1*4
USB_MINI

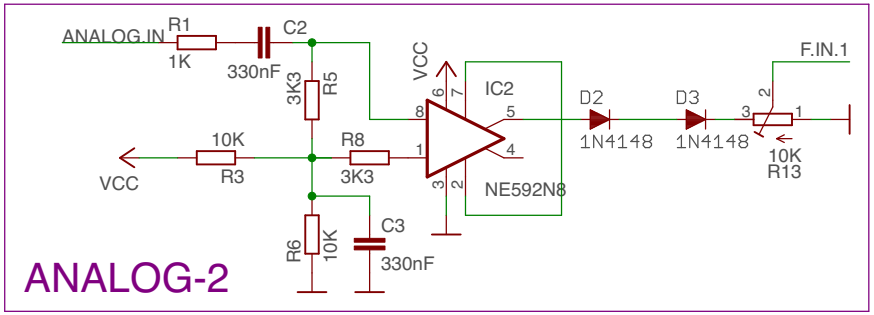
ANALOG-2
ANALOG.IN
R1
1K
C2
330nF
3K3
R5
VCC
IC2
NE592N8
D2
1N4148
D3
1N4148
F.IN.1
10K
R13
VCC
10K
R3
R8
3K3
R6
10K
C3
330nF

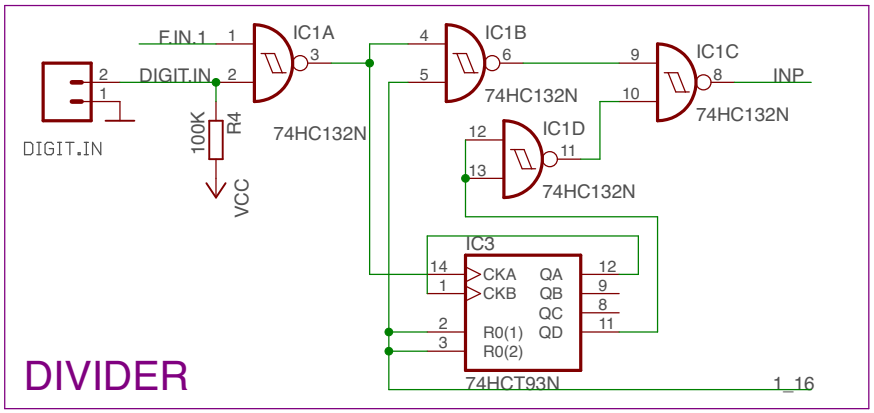
DIVIDER
F.IN.1
DIGIT.IN
IC1A
74HC132N
IC1B
74HC132N
IC1C
74HC132N
IC1D
74HC132N
INP
DIGIT.IN
100K
R4
VCC
IC3
CKA
CKB
QA
QB
QC
QD
R0(1)
R0(2)
74HCT93N
1_16

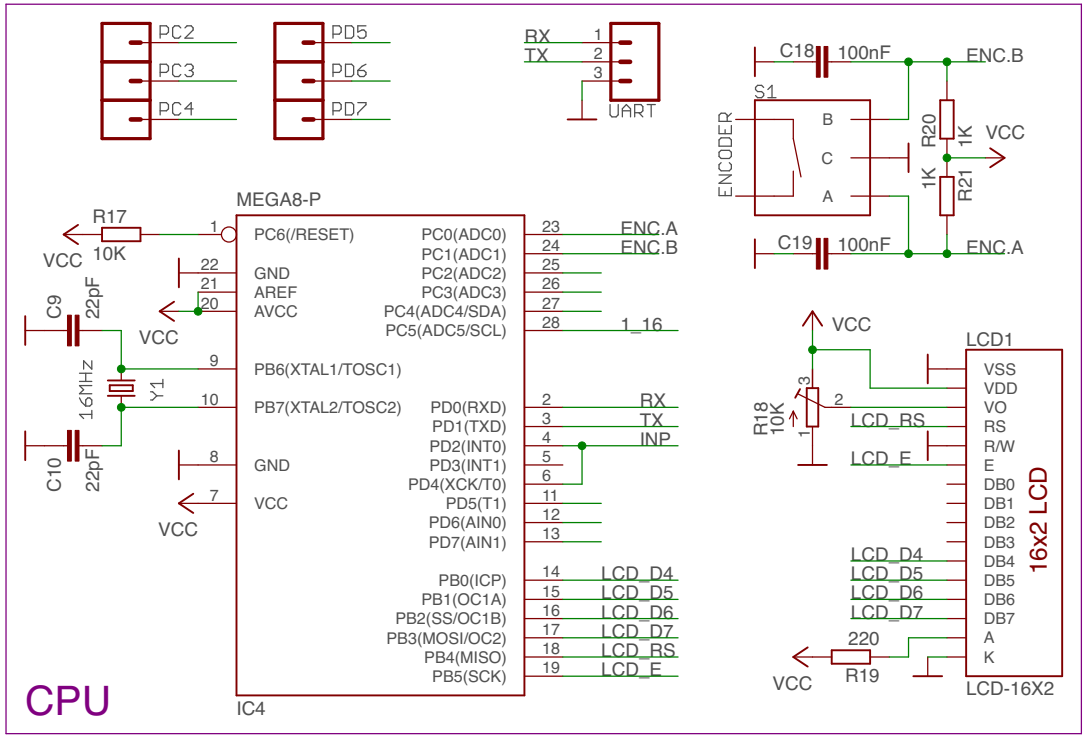
CPU
PC2
PC3
PC4
PD5
PD6
PD7
RX
TX
UART
C18
100nF
ENC.B
S1
ENCODER
B
C
A
R20
1K
VCC
R21
1K
C19
100nF
ENC.A
MEGA8-P
R17
10K
VCC
PC6(/RESET)
GND
AREF
AVCC
C9
22pF
VCC
16MHz
Y1
PB6(XTAL1/TOSC1)
PB7(XTAL2/TOSC2)
C10
22pF
GND
VCC
PC0(ADC0)
PC1(ADC1)
PC2(ADC2)
PC3(ADC3)
PC4(ADC4/SDA)
PC5(ADC5/SCL)
ENC.A
ENC.B
1_16
PD0(RXD)
PD1(TXD)
PD2(INT0)
PD3(INT1)
PD4(XCK/T0)
PD5(T1)
PD6(AIN0)
PD7(AIN1)
RX
TX
INP
PB0(ICP)
PB1(OC1A)
PB2(SS/OC1B)
PB3(MOSI/OC2)
PB4(MISO)
PB5(SCK)
LCD_D4
LCD_D5
LCD_D6
LCD_D7
LCD_RS
LCD_E
IC4
VCC
R18
10K
LCD_RS
LCD_E
LCD_D4
LCD_D5
LCD_D6
LCD_D7
220
R19
VCC
LCD1
VSS
VDD
VO
RS
R/W
E
DB0
DB1
DB2
DB3
DB4
DB5
DB6
DB7
A
K
16x2 LCD
LCD-16X2